RevNo	Revision note	Rev-By	RevDate	Signature	Checked

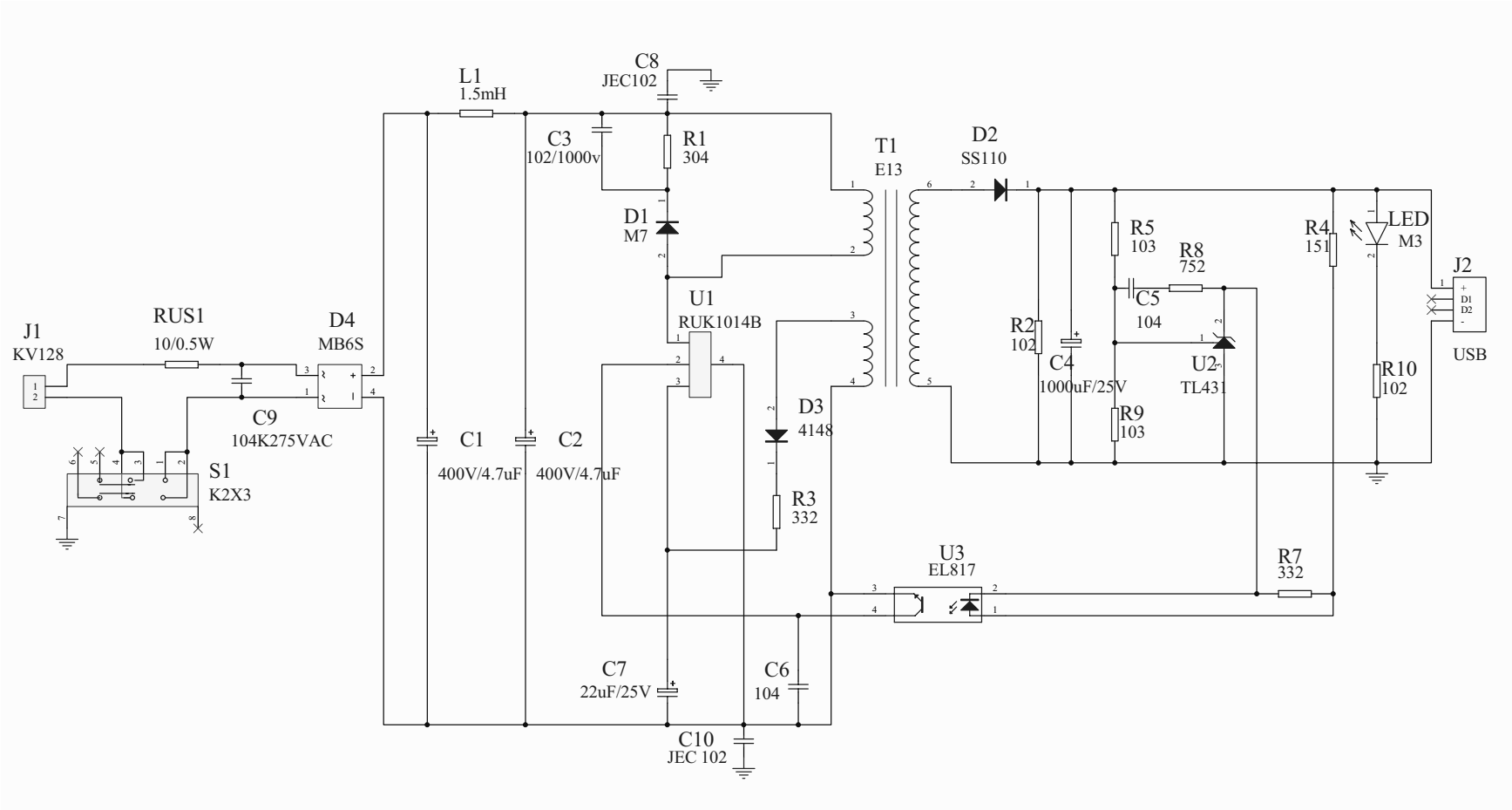

ITEM NO.	WP-31UC			
CUSTOMER NO.				
DESIGNED BY CH	DATE	121122	UNIT	MM
	SCALE	xx	VER.	1
NO.	Checked by			
APPR:	Approved by -date			